xylem
Let's Solve Water

50 Hz

BG Series

CLOSE-COUPLED SELF-PRIMING CENTRIFUGAL PUMPS EQUIPPED WITH IE2, IE3 MOTORS (REG. (EU) 2019/1781)

ErP 2009/125/EC

LOWARA
a xylem brand

Cod. 191003251 Rev.C Ed.05/2023

Directive 2009/125/EC of the European Union

The **Directive 2005/32/EC** on energy-using products (**EuP**) and the subsequent **Directive 2009/125/EC** on energy-related products (**ErP**) established the ecodesign requirements for products to reduce their energy consumption and consequently their environmental impact.

These requirements apply to products placed and used in the European Economic Area (European Union plus Iceland, Liechtenstein and Norway) as a stand-alone unit or as integrated parts in other products.

The following tables show the Regulations that define the requirements for Lowara products.

- Some types of **pump**, used for pumping clean water:

Regulations	From	Target
(EU) N. 547/2012	1 January 2015	**MEI** ≥ 0,4

- **Circulators** with a rated hydraulic output power of between 1 and 2500 W, designed for use in heating systems or in secondary circuits of cooling distribution systems:

Regulations	From	Target
(EC) N. 641/2009, (EU) N. 622/2012 and (EU) 2019/1781	1 August 2015	**EEI** < 0,23

- **Three-phase motors** with frequency 50 or 60 or 50/60 Hz and voltages between 50 and 1000 V (S1 and D.O.L.):

Regulations	From	Target
(EU) 2019/1781 and 2021/341	1 July 2023	**IE2**: motors with a rated output ≥ 0,12 and ≤ 0,749 kW **IE3**: motors with a rated output ≥ 0,75 and ≤ 74,9 kW **IE4**: motors with a rated output ≥ 75 and ≤ 200 kW **IE3**: motors with a rated output ≥ 201 and ≤ 1000 kW

- **Single-phase motors** with frequency 50 or 60 or 50/60 Hz and voltages between 50 and 1000 V (S1 and D.O.L.):

Regulations	From	Target
(EU) 2019/1781 and 2021/341	1 July 2023	**IE2**: motors with a rated output ≥ 0,12

- **Variable speed drives** with three-phase input and rated output power from 0,12 kW up to 1000 kW, rated for operating with motor included in the same regulations:

Regulations	From	Target
(EU) 2019/1781 and 2021/341	1 July 2021	**IE2**

Lowara, Xylect are trademarks of Xylem Inc. or one of its subsidiaries.
All other trademarks of registered trademarks are property of their respective owners.

LOWARA
a xylem brand

CONTENTS

BG Series

GENERAL INTRODUCTION 5
IDENTIFICATION CODE 6
LIST OF MODELS AND TABLE OF MATERIALS 7
MECHANICAL SEAL 8
MOTORS (ErP 2009/125/EC) 9
PUMPS (ErP 2009/125/EC) 10
OPERATING CHARACTERISTICS 11
DIMENSIONS AND WEIGHTS 13

LOWARA
a xylem brand

Close-coupled self-priming centrifugal pumps with built-in ejector system

MARKET SECTORS
CIVIL, AGRICULTURAL, INDUSTRIAL.

APPLICATIONS
- Water distribution.
- Pressure boosting.
- Irrigation.
- Washing.
- Rain water collection.
- Industrial washing machines and commercial dishwashers.

BG Series

SPECIFICATIONS

PUMP
- **Delivery** up to 4,2 m^3/h
- **Head** up to 53 m
- Maximum working **pressure**: 8 bar (PN 8).
- **Maximum total lift**: 8 m.
- Temperature of **pumped liquid**: -10°C to +40°C.
- Maximum **ambient temperatur**e: +40°C.
- **Motor power**: from 0,4 kW to 1,1 kW.

MOTOR
- Asynchronous, squirrel cage rotor, enclosed construction in aluminum casing, external ventilation.
- **Protection**: IP55.
- Class 155 (F) **insulation**.
- Performances according to EN 60034-1.
- Maximum ambient **temperature**: 40°C.
- **Standard voltage**:

- **Single-phase** version:
  220-240 V 50 Hz, 2 poles with built-in automatic reset overload protection.
- **Three-phase** version:
  220-240/380-415 V 50 Hz;
  overload protection to be provided by the user.

CONSTRUCTION FEATURES
- Close-coupled self-priming centrifugal pumps with built-in ejector system, designed to remain primed even in the presence of water-dissolved gases.
- The extensive use of pressed stainless steel ensures a high-performance, durable and lightweight pump.

ADDITIONAL OFFERING
- "Garden" version available with handle, cable with plug and terminal box with built-in switch.

BG SERIES
IDENTIFICATION CODE

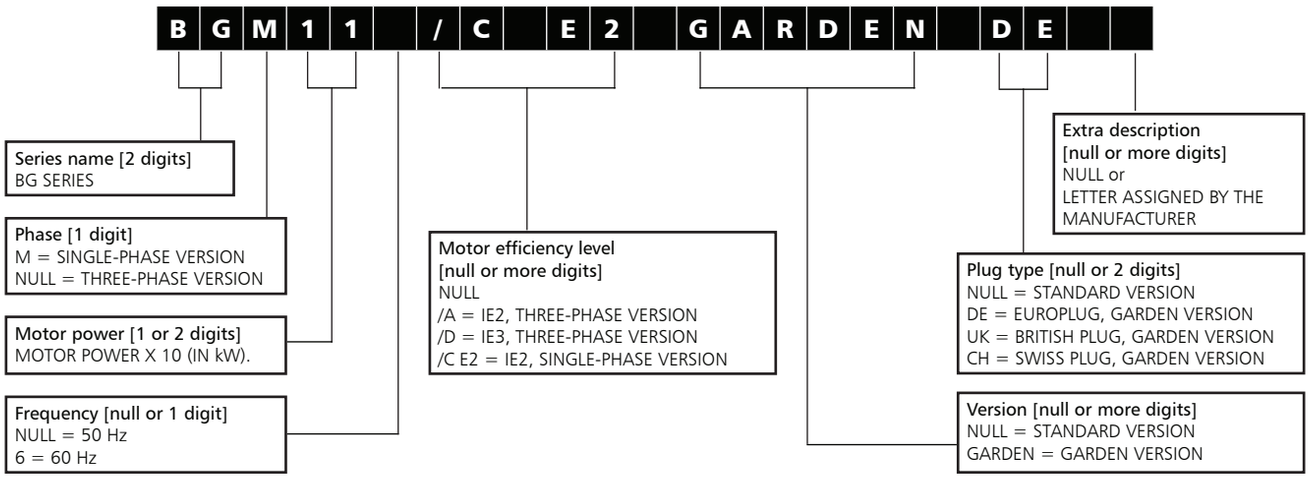

EXAMPLES:

BG5/A

BG SERIES electric pump, three-phase, motor power 0,55 kW, IE2 motor efficiency, 50 Hz.

BGM3/C E2 GARDEN DE 220-240 50

BG SERIES electric pump, single-phase, motor power 0,55 kW, IE2 motor efficiency, 50 Hz, GARDEN version with cable and European plug (DE).

RATING PLATE

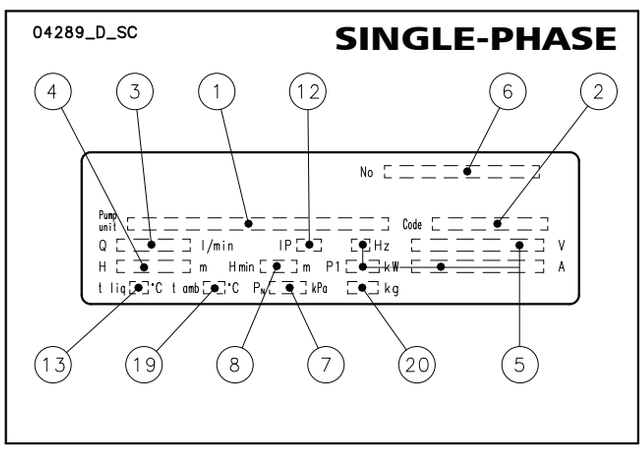

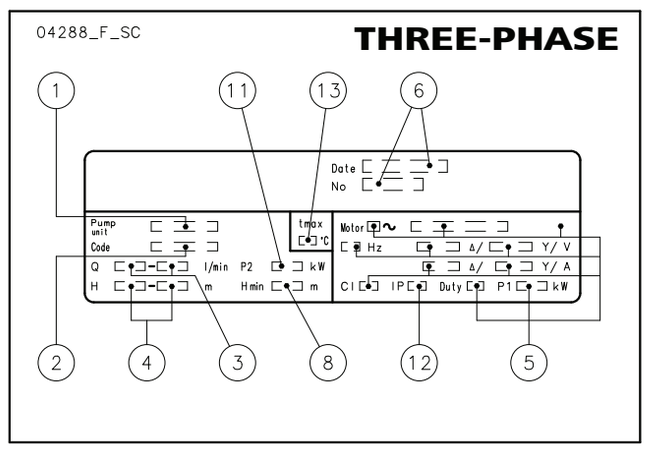

LEGEND

1 - Electric pump unit type
2 - Electric pump unit code
3 - Flow range
4 - Head range
5 - Electrical data
6 - Serial number (data + order number)
8 - Minimum head (EN 60335-2-41)
11 - Rated power
12 - Protection degree
13 - Maximum operating liquid temperature
19 - Maximum operating ambient temperature
20 - Weight

BG SERIES
LIST OF MODELS AND TABLE OF MATERIALS

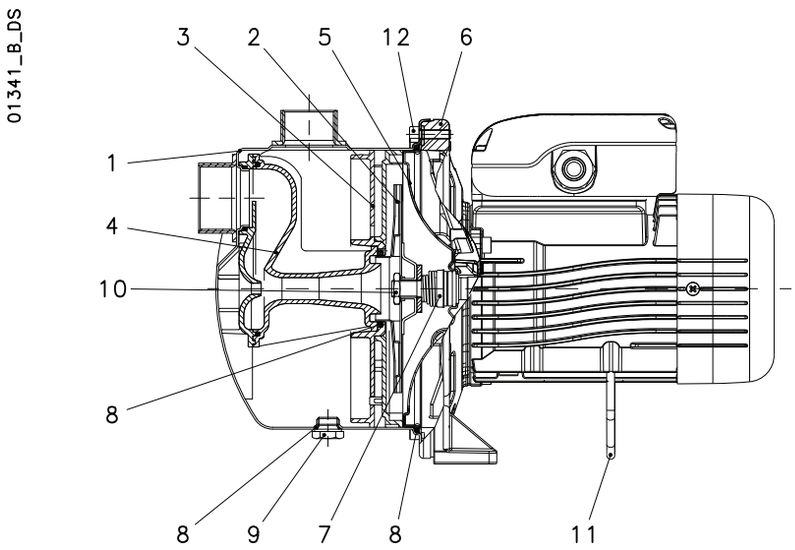

VERSIONS
BGM3/C
BGM5/C
BGM7/C
BGM11/C
BG3/A
BG5/A
BG7/D
BG9/D
BG11/D

bg-en_b_mo

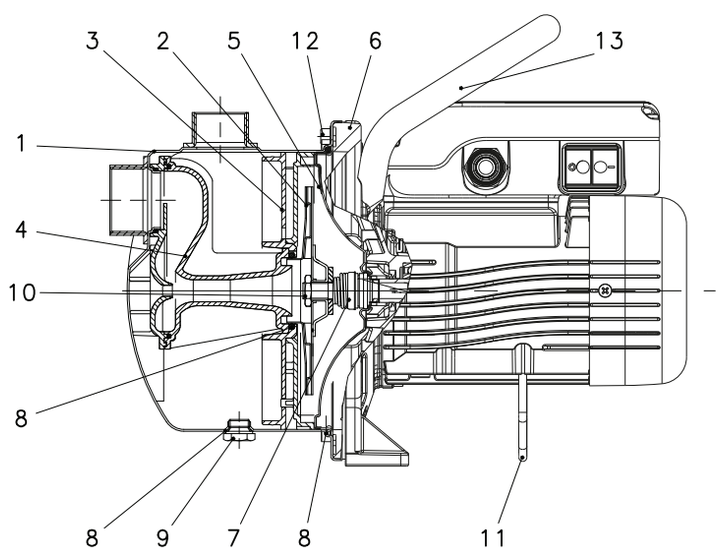

VERSIONS
BGM3/C .. GARDEN
BGM5/C .. GARDEN
BGM7/C .. GARDEN
BGM11/C .. GARDEN

bgm-garden-en_b_mo

REF. N.	PART	MATERIAL	REFERENCE STANDARDS	
			EUROPE	USA
1	Pump body	Stainless steel	EN 10088-1-X5CrNi18-10 (1.4301)	AISI 304
2	Impeller	Stainless steel	EN 10088-1-X5CrNi18-10 (1.4301)	AISI 304
3	Diffuser	Technopolymer (PA66+GF30)		
4	Ejector	Technopolymer (PA66+GF30)		
5	Seal housing	Stainless steel	EN 10088-1-X5CrNi18-10 (1.4301)	AISI 304
6	Adapter	Aluminium	EN 1706-AC-AlSi8Cu3 (Fe) (AC46200)	-
7	Mechanical seal	Ceramic / Carbon / EPDM (standard version)		
8	Elastomers	EPDM (standard version)		
9	Fill/drain plugs	Nickel-plated brass	EN 12164 CuZn39Pb3 (CW614N)	
10	Impeller lock nut	Stainless steel	EN 10088-1-X5CrNiMo17-12-2 (1.4401)	AISI 316
11	Support foot	Galvanized steel		
12	Pump body fastening nuts and bolts	Galvanized steel		
13	Handle (only for BGM garden)	Painted steel		
14	Switch (only for BGM garden)			
15	Power cable (only for BGM garden)	H07RN-F 3G1 (2 m) with europlug as standard		

bg-bg-gard-en_c_tm

BG SERIES
MECHANICAL SEAL

Mechanical seal with mounting dimensions according to EN12756 (ex DIN 24960) and ISO 3069.

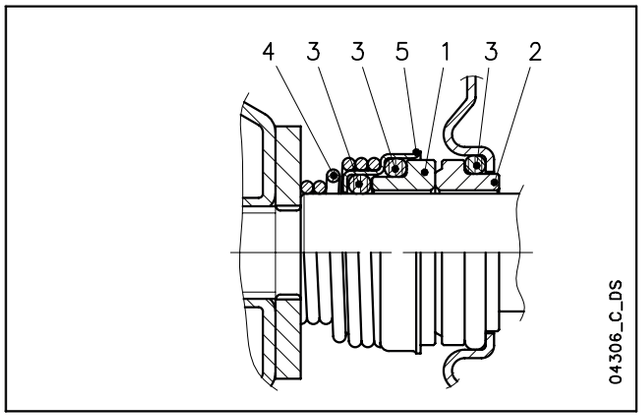

LIST OF MATERIALS

POSITION 1 - 2	POSITION 3	POSITION 4 - 5
B_3 : Carbon graphite	E_2 : EPDM	G : AISI 316
V : Ceramica	V : FPM	

bg_ten-mec-en_b_tm

SEAL TYPES

TYPE	POSITION					TEMPERATURE (°C)
	1	2	3	4	5	
	ROTATING ASSEMBLY	FIXED ASSEMBLY	ELASTOMERS	SPRINGS	OTHER COMPONENTS	
STANDARD MECHANICAL SEAL						
VB_3E_2GG	V	B_3	E_2	G	G	-10 +110
OTHER TYPES OF MECHANICAL SEAL						
VB_3VGG	V	B_3	V	G	G	-10 +110 *

* for hot water: max 80°C

bg_tipi-ten-mec-en_b_tc

NOTE: The maximum temperature for BG series is **+40°C**.

BG SERIES
MOTORS (ErP 2009/125/EC)

- Short-circuit squirrel-cage motor, enclosed construction with external ventilation (TEFC).
- **IP55** protection degree.
- Insulation class **155 (F)**.
- Electrical performances according to EN 60034-1.
- Supplied **single-phase** surface motors with **IE2** efficiency level
- Supplied **three-phase** surface motors with **IE2** efficiency level (power < 0,75 kW) or **IE3** efficiency level (power ≥ 0,75 kW) as standard according to EN 60034-30:2009 and EN 60034-30-1:2014.
- Metric cable gland according to EN 50262.

- **Single-phase** version:
  0,55 to 1,1 kW (2-pole)
  220-240 V 50 Hz
  Built-in automatic reset overload protection
  Maximum ambient temperature: 40 °C.
- **Three-phase** version:
  0,4 to 1,1 kW (2-pole)
  220-240/380-415 V 50 Hz
  Overload protection to be provided by the user.
  Maximum ambient temperature: 40 °C.

From 1 July 2023 in accordance with the **Regulations (EU) 2019/1781 and (EU) 2021/341**, the three-phase 50 Hz, 60 Hz or 50/60 Hz **surface motors** with **power outputs ranging from 0,12 to 0,749 kW** must have a minimum level **IE2** efficiency; the ones with power outputs ranging **from 0,75 to 74,9 kW** must have a minimum level of **IE3** efficiency. The single-phase **surface motors** with **power outputs ranging from 0,12 kW** must have a minimum level **IE2** efficiency.

The following tables also contain the mandatory information pursuant to Annex I, section 2, of the aforementioned Regulations.

SINGLE-PHASE MOTORS AT 50 Hz, 2 POLES

P_N kW	MOTOR TYPE	IEC SIZE	Construction Design	INPUT CURRENT In (A) 220-240 V	CAPACITOR µF	CAPACITOR V	DATA FOR 230 V 50 Hz VOLTAGE min^{-1}	Is / In	η %	cosφ	Tn Nm	Ts/Tn	Tm/Tn	Operating conditions * Altitude A.S.L. m	T. amb min/max °C	ATEX
0,55	SM71BG/1055	71	SPECIAL	3,33-3,19	16	450	2810	4,16	74,1	0,99	1,87	0,69	2,13	≤1000	-15 / 40	No
0,75	SM80BG/1075	80		4,38-4,27	25	450	2865	5,11	77,4	0,97	2,50	0,40	2,26			
0,8	SM80BG/1085	80		4,71-4,52	25	450	2850	4,79	77,8	0,97	2,68	0,37	2,11			
1,1	SM80BG/1115	80		6,26-5,93	30	450	2860	4,78	79,6	0,98	3,67	0,50	2,14			

* Operating conditions to be referred to motor only. About electric pump, refer to limits in user's manual.

bg-motm_2p50-en_c_te

BG SERIES
THREE-PHASE MOTORS AT 50 Hz, 2 POLES

P_N kW	Manufacturer: Xylem Service Italia Srl, Reg. No. 07520560967, Montecchio Maggiore Vicenza - Italia — Model	IEC SIZE	Construction Design	N. of Poles	f_N Hz	Data for 400 V / 50 Hz Voltage: cosφ	Is / I_N	T_N Nm	Ts/T_N	Tm/Tn
0,40	SM63BG/304	63	SPECIAL	2	50	0,64	4,35	1,37	4,14	3,13
0,55	SM71BG/305	71				0,74	5,97	1,85	3,74	3,56
0,75	SM80BG/307 PE	80				0,78	7,38	2,48	3,57	3,75
1,1	SM80BG/311 PE	80				0,79	8,31	3,63	3,95	3,95

P_N kW	Voltage U_N V: Δ 220 V	Δ 230 V	Δ 240 V	Y 380 V	Y 400 V	Y 415 V	Δ 380 V	Δ 400 V	Δ 415 V	Y 660 V	Y 690 V	n_N min^{-1}	Operating conditions *: Altitude Above Sea Level (m)	T. amb min/max °C	ATEX
	I_N (A)														
0,40	2,03	2,18	2,32	1,17	1,26	1,34	-	-	-	-	-	2745 ÷ 2800	≤ 1000	-15 / 40	No
0,55	2,46	2,49	2,56	1,42	1,44	1,48	-	-	-	-	-	2835 ÷ 2865			
0,75	2,96	2,94	2,96	1,71	1,70	1,71	1,70	1,69	1,70	0,98	0,98	2875 ÷ 2895			
1,1	4,19	4,14	4,16	2,42	2,39	2,40	2,41	2,38	2,38	1,39	1,37	2870 ÷ 2900			

P_N kW	Δ 220 V Y 380 V 4/4	3/4	2/4	Δ 230 V Y 400 V 4/4	3/4	2/4	Δ 240 V Y 415 V 4/4	3/4	2/4	Δ 380 V Y 660 V 4/4	3/4	2/4	Δ 400 V Y 690 V 4/4	3/4	2/4	Δ 415 V 4/4	3/4	2/4	IE
0,40	70,4	73,2	68,9	70,4	70,3	64,5	70,4	67,2	60,2	-	-	-	-	-	-	-	-	-	2
0,55	74,1	74,2	70,4	74,1	73,6	68,8	74,1	72,7	67,1	-	-	-	-	-	-	-	-	-	
0,75	82,5	83,1	81,3	82,8	82,7	80,1	82,6	82,0	78,9	82,5	82,0	78,9	82,5	82,0	78,9	82,5	82,0	78,9	3
1,1	84,0	84,7	83,4	84,4	84,5	82,5	84,3	84,0	81,4	84,0	84,0	81,4	84,0	84,0	81,4	84,0	84,0	81,4	

* Operating conditions to be referred to motor only. About electric pump, refer to limits in user's manual.

bg-IE3-mott-2p50-en_b_te

BG SERIES
PUMPS (ErP 2009/125/EC)

In accordance with **Article 1(2)(d) of Regulation (EU) No 547/2012**, self-priming pumps are currently **excluded** from ecodesign requirements for water pumps.

BGM, BGM..GARDEN SERIES
OPERATING CHARACTERISTICS AT 50 Hz, 2 POLES

BGM, BGM GARDEN	~ 2900 [rpm]	ISO 9906:2012 - Grade 3B

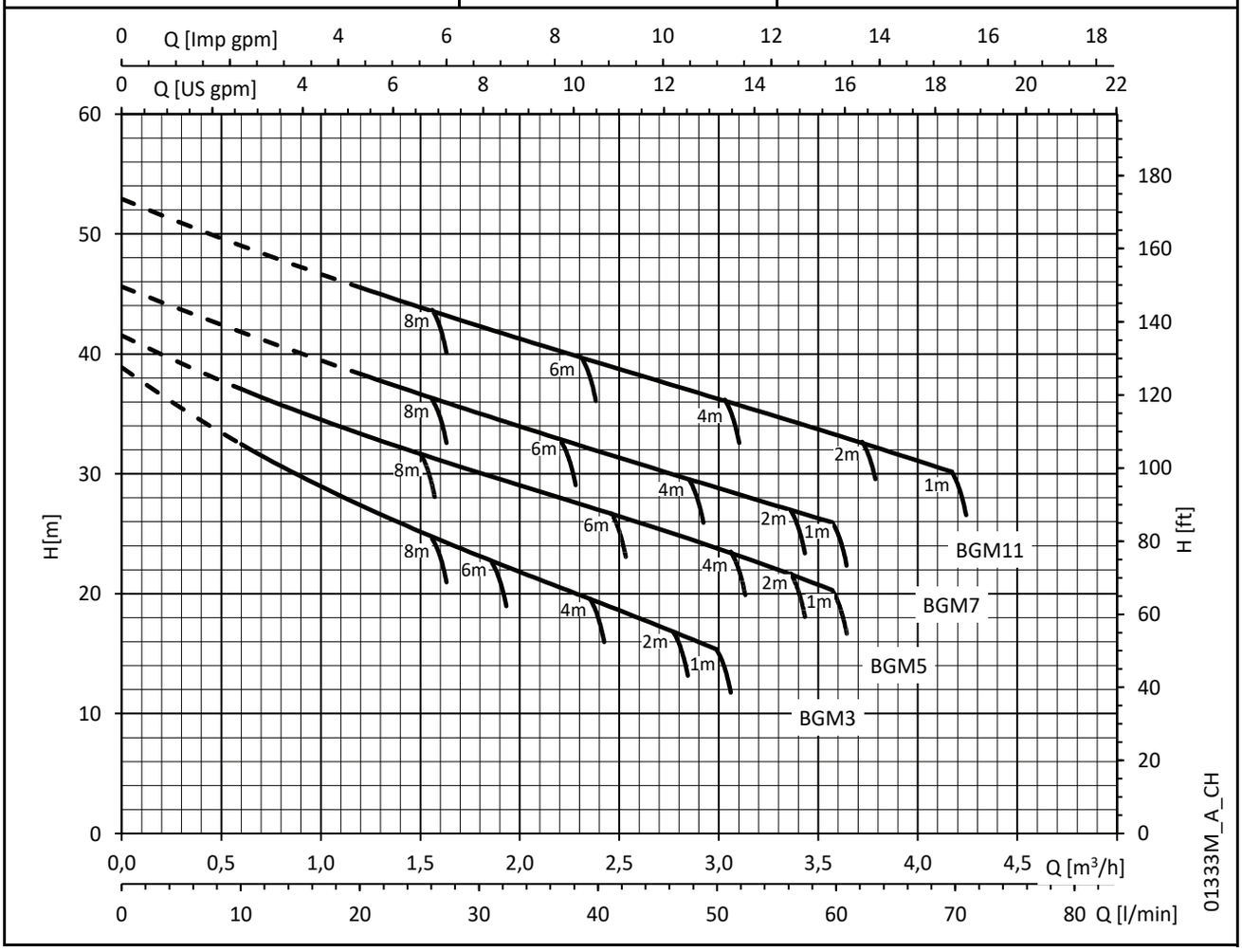

Maximum delivery depends on geodetic suction lift with clean pipe (1"¼ and 8 m) and a clean 1¼" foot valve.

TABLE OF PERFORMANCES AT 50 Hz, 2 POLES

PUMP TYPE BGM BGM..GARDEN	VERSIONE	MOTOR P_N kW	MOTOR TYPE	ELECTRIC PUMP * P1 kW	ELECTRIC PUMP * I 220-240 V A	ELECTRIC PUMP CAPACITOR µF / 450 V	Q = DELIVERY l/min 0 / m3/h 0	10 / 0,6	17,5 / 1,1	25 / 1,5	32,5 / 2,0	40 / 2,4	47,5 / 2,9	55 / 3,3	62,5 / 3,8	70 / 4,2
							H = TOTAL HEAD IN METRES OF COLUMN OF WATER									
BGM3	1 ~	0,55	SM71BG/1055	0,67	2,87	16	38,9	32,5	28,5	25,2	22,1	19,2	16,3			
BGM5		0,75	SM80BG/1075	0,85	3,79	25	41,5	37,1	34,2	31,7	29,3	27,0	24,6	22,0		
BGM7		0,8	SM80BG/1085	1,04	4,63	25	45,6			36,6	34,2	31,8	29,5	27,3		
BGM11		1,1	SM80BG/1115	1,34	5,92	30	52,9			43,9	41,5	39,2	37,0	34,7	32,4	30,0

Hydraulic performances in compliance withi ISO 9906:2012 - Grade 3B (ex ISO 9906:1999 - Annex A)

bgm-2p50-en_a_th

* Maximum value in specified range: P1 = input power; I = input current.

BG SERIES
OPERATING CHARACTERISTICS AT 50 Hz, 2 POLES

BG	~ 2900 [rpm]	ISO 9906:2012 - Grade 3B

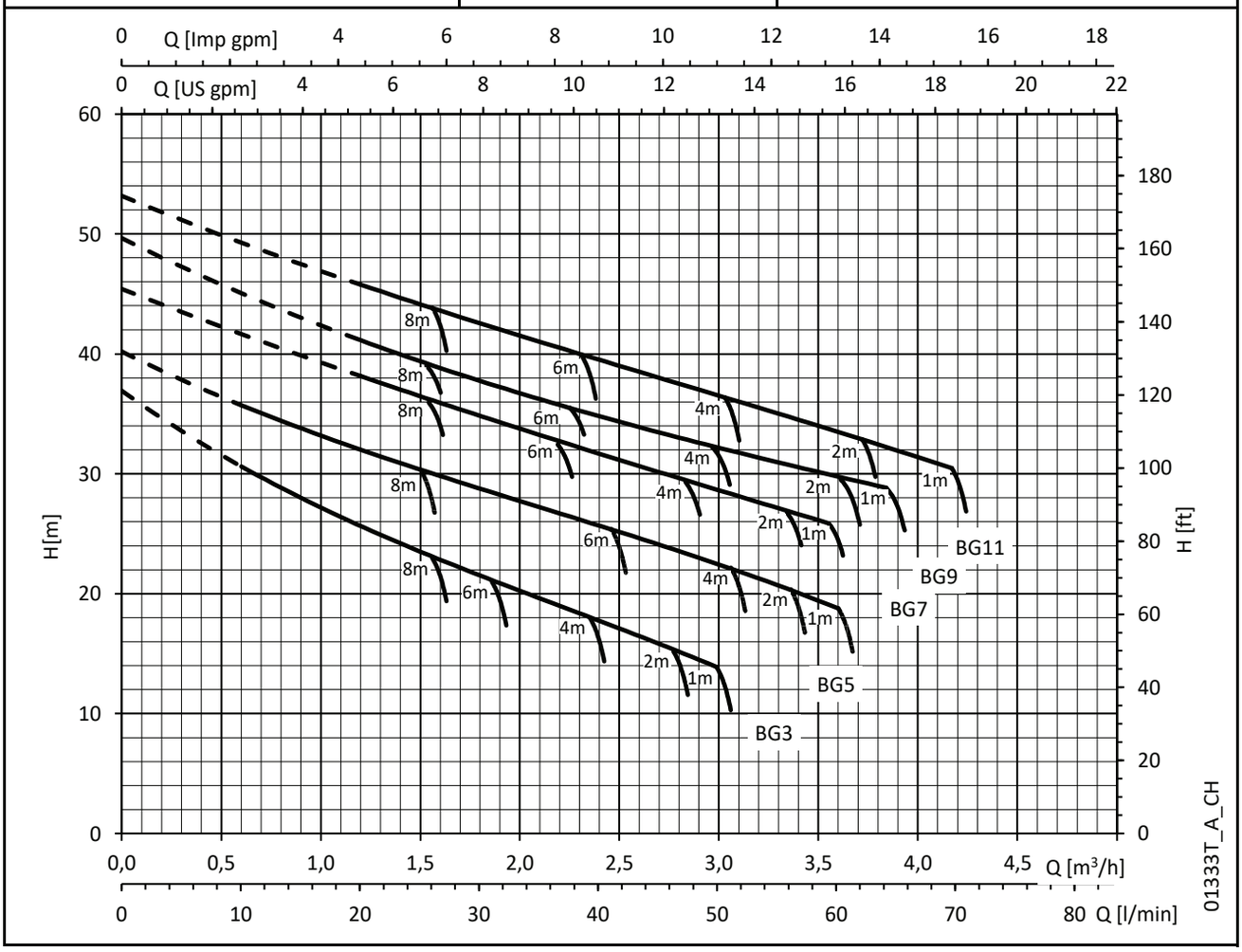

Maximum delivery depends on geodetic suction lift with clean pipe (1"¼ and 8 m) and a clean 1¼" foot valve.

TABLE OF PERFORMANCES AT 50 Hz, 2 POLES

PUMP TYPE	VERSIONE	MOTOR		ELECTRIC PUMP			Q = DELIVERY									
					* I		l/min 0	10	17,5	25	32,5	40	47,5	55	62,5	70
		P_N	TYPE	* P1	220-240 V	380-415 V	m3/h 0	0,6	1,1	1,5	2,0	2,4	2,9	3,3	3,8	4,2
		kW		kW	A	A	H = TOTAL HEAD IN METRES OF COLUMN OF WATER									
BG3	3 ~	0,4	SM63BG/304	0,68	2,56	1,48	36,9	30,6	26,8	23,5	20,6	17,7	14,8			
BG5		0,55	SM71BG/305	0,81	2,74	1,58	40,2	35,7	32,9	30,3	28,0	25,7	23,3	20,7		
BG7		0,75	SM80BG/307PE	1,02	3,17	1,83	45,4			36,5	34,0	31,7	29,4	27,1		
BG9		0,9	SM80BG/311PE	1,11	3,78	2,18	49,6			39,4	37,0	34,8	32,8	30,9	29,2	
BG11		1,1	SM80BG/311PE	1,30	4,16	2,40	53,2			44,1	41,8	39,5	37,3	35,0	32,7	30,3

Hydraulic performances in compliance withi ISO 9906:2012 - Grade 3B (ex ISO 9906:1999 - Annex A)

bg-2p50-en_b_th

* Maximum value in specified range: P1 = input power; I = input current.

BG SERIES
DIMENSIONS AND WEIGHTS AT 50 Hz, 2 POLES

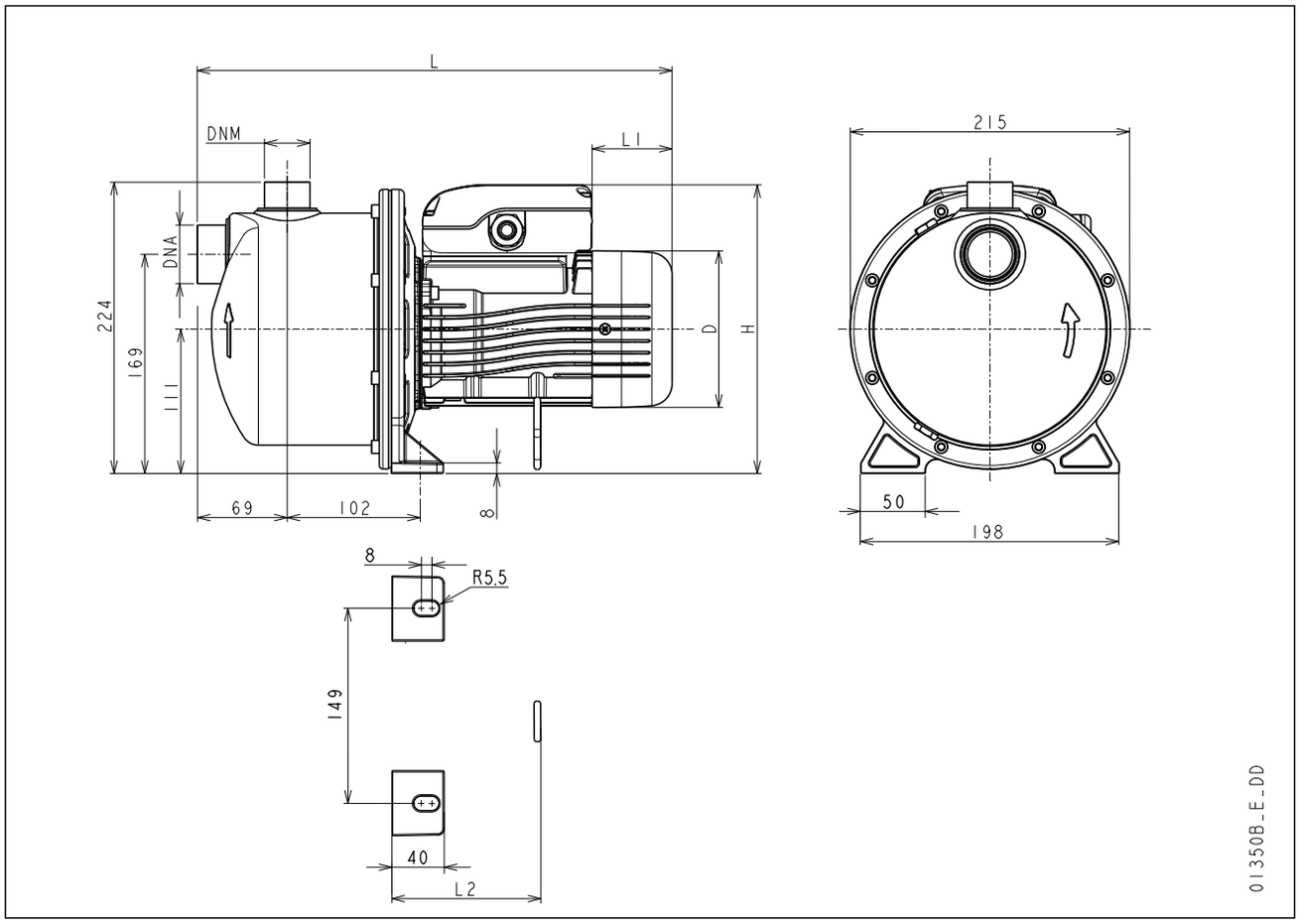

PUMP TYPE	DIMENSIONS (mm)					DNA	DNM	WEIGHT
	D	L	L1	L2	H			kg
BGM3/C	140	380	76	117	232	Rp 1¼	Rp 1	11,0
BGM5/C	156	425	69	150	248	Rp 1¼	Rp 1	12,0
BGM7/C	156	425	69	150	248	Rp 1¼	Rp 1	12,0
BGM11/C	156	425	69	150	248	Rp 1¼	Rp 1	14,0
BG3/A	120	366	62	115	222	Rp 1¼	Rp 1	9,0
BG5/A	140	380	76	117	232	Rp 1¼	Rp 1	11,0
BG7/D	155	425	114	150	240	Rp 1¼	Rp 1	15,0
BG9/D	155	425	114	150	240	Rp 1¼	Rp 1	17,0
BG11/D	155	425	114	150	240	Rp 1¼	Rp 1	17,0

bg-2p50-en_f_td

BGM GARDEN SERIES
DIMENSIONS AND WEIGHTS AT 50 Hz, 2 POLES

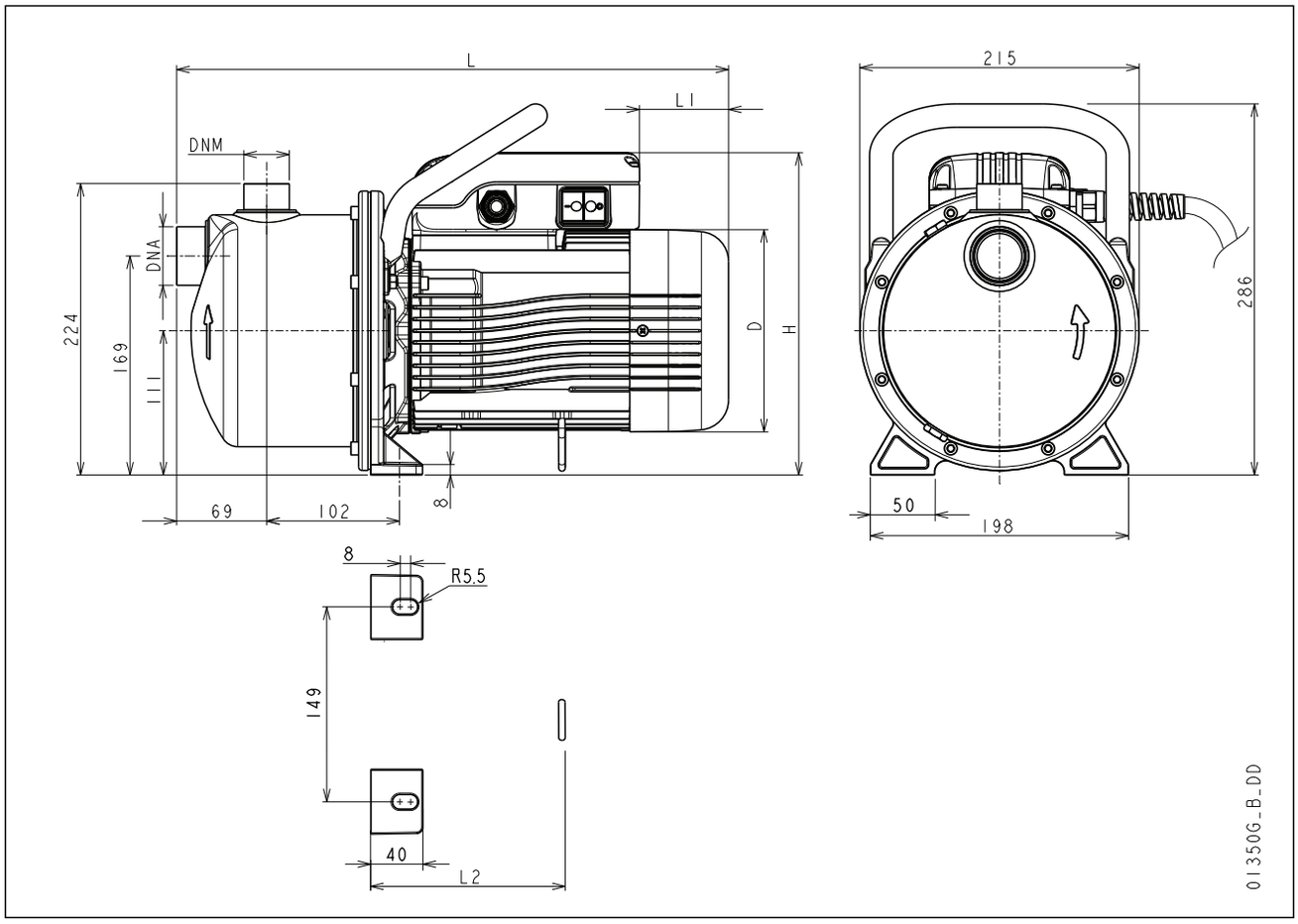

PUMP TYPE	DIMENSIONS (mm)					DNA	DNM	WEIGHT
	D	L	L1	L1	H			kg
BGM3/C .. GARDEN	140	380	30	117	240	Rp 1¼	Rp 1	11,0
BGM5/C .. GARDEN	156	425	69	150	248	Rp 1¼	Rp 1	12,0
BGM7/C .. GARDEN	156	425	69	150	248	Rp 1¼	Rp 1	12,0
BGM11/C .. GARDEN	156	425	69	150	248	Rp 1¼	Rp 1	14,0

bg-gard-2p50-en_c_td

FURTHER PRODUCT SELECTION AND DOCUMENTATION
Xylect

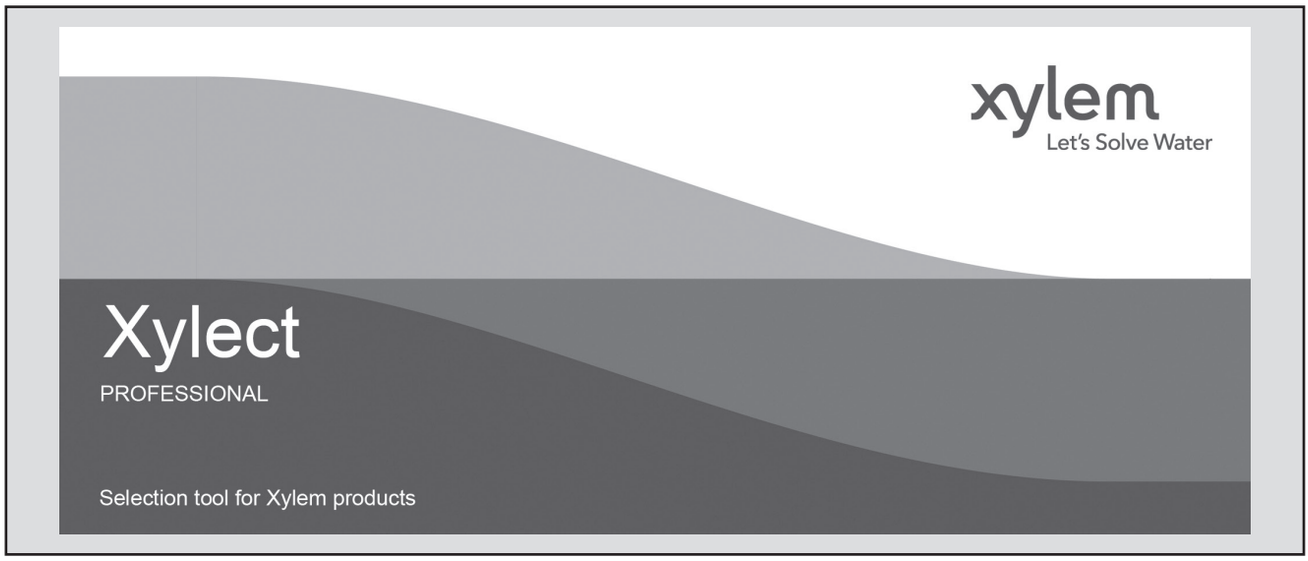

Xylect is pump solution selection software with an extensive online database of product information across the entire Lowara range of pumps and related products, with multiple search options and helpful project management facilities. The system holds up-to-date product information on thousands of products and accessories.

The possibility to search by applications and the detailed information output given makes it easy to make the optimal selection without having detailed knowledge about the Lowara products.

The search can be made by:

- Application
- Product type
- Duty point

Xylect gives a detailed output:

- List with search results
- Performance curves (flow, head, power, efficiency, NPSH)
- Motor data
- Dimensional drawings
- Options
- Data sheet printouts
- Document downloads incl dxf files

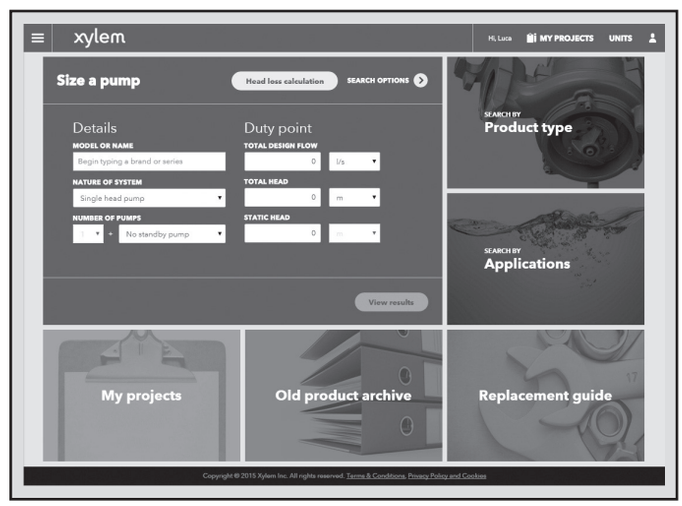

The search by application guides users not familiar with the product range to the right choice.

FURTHER PRODUCT SELECTION AND DOCUMENTATION
Xylect

The detailed output makes it easy to select the optimal pump from the given alternatives.

The best way to work with Xylect is to create a personal account. This makes it possible to:

- Set own standard units
- Create and save projects
- Share projects with other Xylect users

Every registered user has a proper space, where all projects are saved.

For more information about Xylect please contact our sales network or visit www.xylect.com.

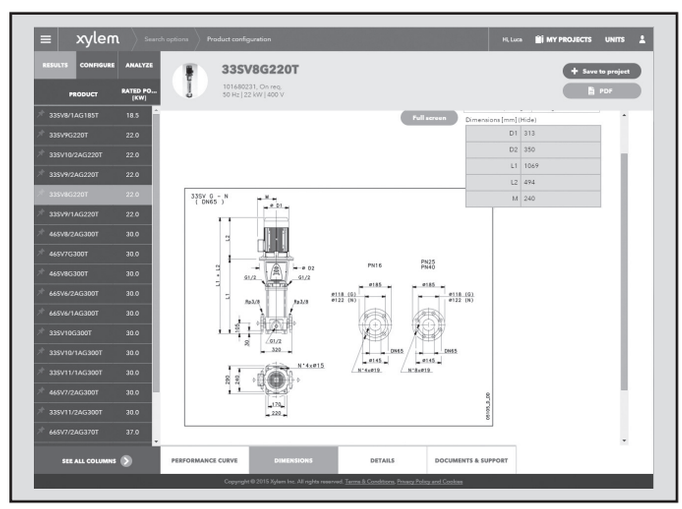

Dimensional drawings appear on the screen and can be downloaded in dxf format.

Xylem |ˈzīləm|

1) The tissue in plants that brings water upward from the roots;
2) a leading global water technology company.

We're a global team unified in a common purpose: creating advanced technology solutions to the world's water challenges. Developing new technologies that will improve the way water is used, conserved, and re-used in the future is central to our work. Our products and services move, treat, analyze, monitor and return water to the environment, in public utility, industrial, residential and commercial building services settings. Xylem also provides a leading portfolio of smart metering, network technologies and advanced analytics solutions for water, electric and gas utilities. In more than 150 countries, we have strong, long-standing relationships with customers who know us for our powerful combination of leading product brands and applications expertise with a strong focus on developing comprehensive, sustainable solutions.

For more information on how Xylem can help you, go to www.xylem.com.

LOWARA®

xylem
Let's Solve Water

For information and technical support
Xylem Service Italia Srl

Via Dottor Vittorio Lombardi 14
36075 - Montecchio Maggiore (VI) - Italy
Tel. (+39) 0444 707111
Fax (+39) 0444 491043
www.lowara.com

Xylem Service Italia Srl reserves the right to make modification without prior notice.
Lowara, Xylem are trademarks of Xylem Inc. or one of its subsidiaries
© 2023 Xylem, Inc.